DRV 730-D
Type A (DN 15 - DN 32)

DRV 730-D
Type B (DN 40 - DN 50)

Pressure reducing valve
Female thread • Steam
Stainless steel

Pressure reducing valves of the series are piston-controlled, spring-loaded pressure reducing valves. These valves are inlet pressure relieved.

DGRL 2014/68/EU CE

Classification societies

- DNV GL
- LR
- BV
- ABS
- CCS

Customs tariff number

84811019

Media

The pressure reducers are particularly suitable for use with hot water and steam, but can also be used in the case of aggressive water and other aggressive liquids. They are also suitable for air and neutral gases when larger flow rates are required.

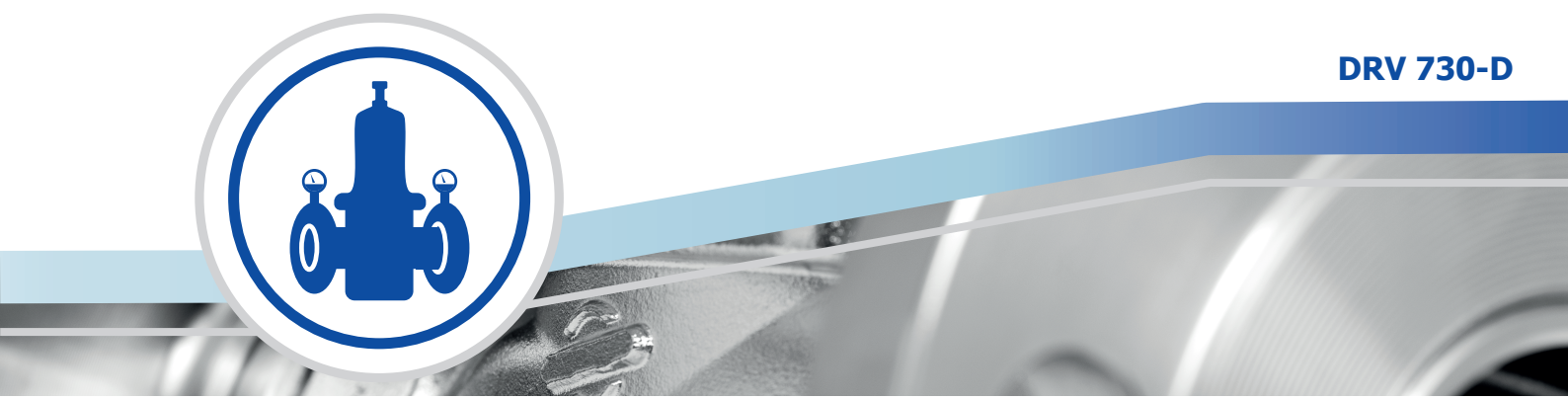

Features

- pressure relieved single seated valve
- piston-controlled
- continuously adjustable outlet pressure
- max. inlet pressure up to 16 bar
- outlet pressure: 0.3 - 2 bar
- female thread acc. ISO 228, optionally with NPT-thread
- replaceable inner parts
- double-ended G ¼" manometer fitting (for outlet pressure)
- assembly position: any desired, preferably vertical
- minimum pressure difference (inlet/outlet pressure): 0.3 bar

Pressures

p1 max. 16 bar

p2 0,3 - 2 bar

Connections

Female thread
acc. ISO 228
from G 1/2" up to G 2"

Temperatures

Various options in the area of seals and wetted inner parts allow a maximum temperature of up to 200 °C.

from -30 °C up to +200 °C

Seals and temperatures

PTFE/ EPDM	- 30 °C to +150 °C
PTFE/ EPDM/ FEPM	+20 °C to +200 °C

Materials

	body	spring bonnet	seals	wetted inner parts	max. temperature
steam up to 150 °C	stainless steel 1.4408	stainless steel 1.4408	PTFE/ EPDM	stainless steel 1.4404	150 °C
steam up to 200 °C	stainless steel 1.4408	stainless steel 1.4408	PTFE/ EPDM/ FEPM	stainless steel 1.4404	200 °C

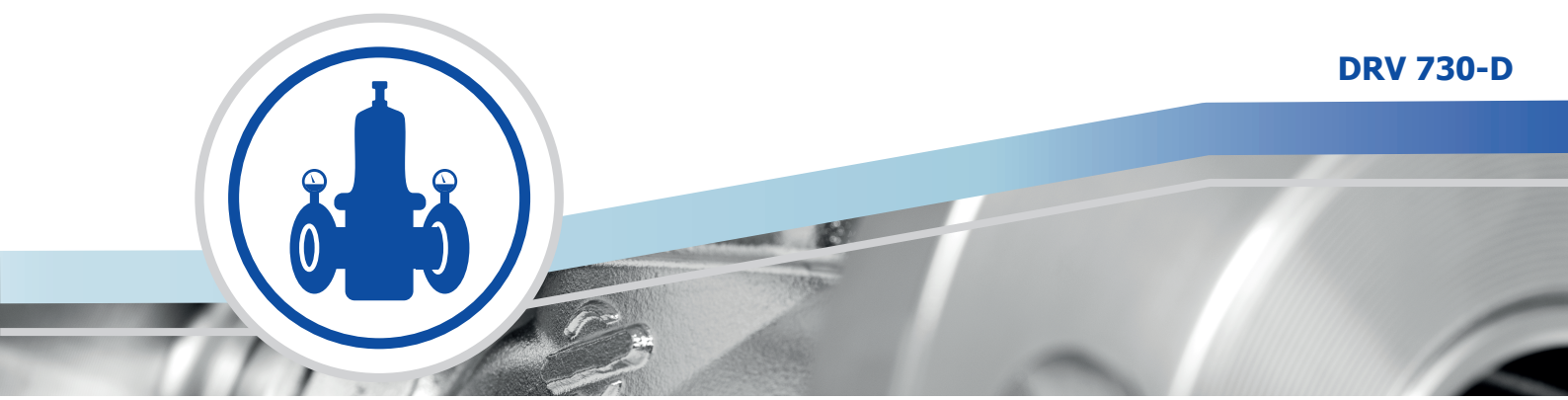

Technical data

nominal size	15	20	25	32	40	50
G	1/2"	3/4"	1"	1 1/4"	1 1/2"	2"
Type	A				B	
Pressures	max. inlet pressure [bar]					
max. 16 bar	DRV 730-D	16				16
	outlet pressure [bar]					
0.3 - 2 bar	DRV 730-D	0.3 - 2				0.3 - 2
Connections	dimensions [mm]					
female thread from G 1/2" up to G 2"	DRV 730-D G	1/2"	3/4"	1"	1 1/4"	1 1/2"	2"
	DRV 730-D b	95	95	110	120	150	160
	DRV 730-D h1	29	29	38	38	38	38
	DRV 730-D h	150	150	151	151	262	262
	weight [kg]						
	DRV 730-D	2.3	2.3	3.1	3.0	8.6	8.5
	kvs-value [m³/h]						
	all types	3.0	3.3	4.5	4.7	11.3	12.0

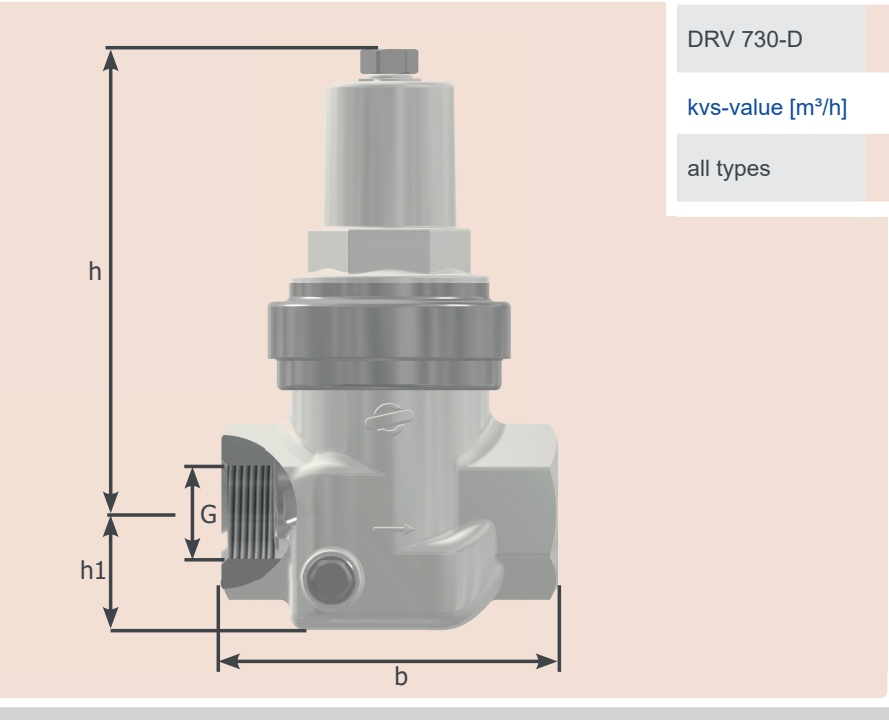

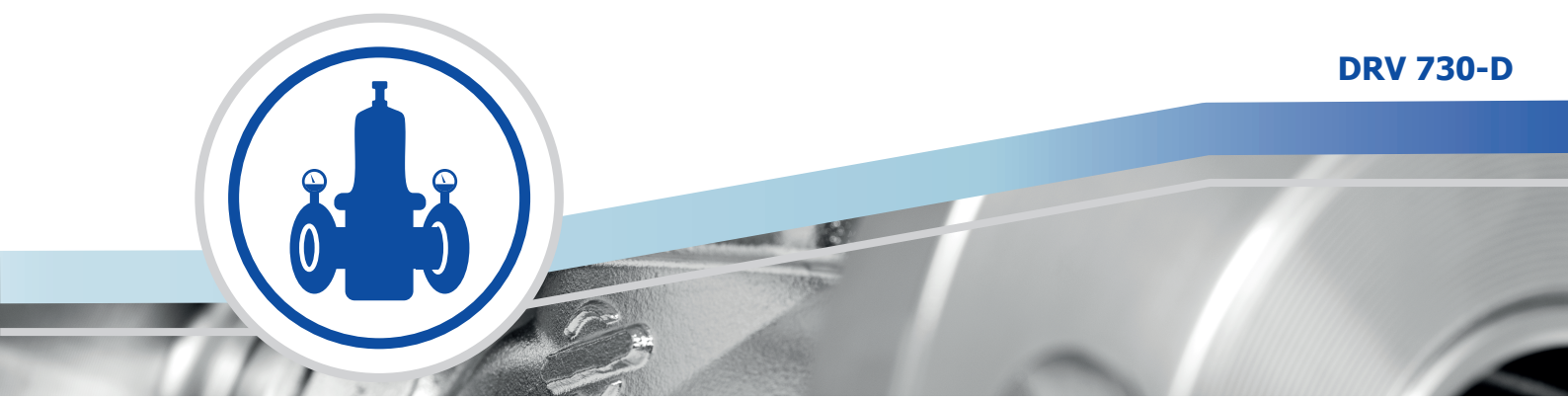

Article number

nominal size	15	20	25	32	40	50
G	1/2"	3/4"	1"	1 1/4"	1 1/2"	2"
steam up to 150 °C						
DRV 730-D	073002-000A0	073003-000A0	073004-000A0	073005-000A0	073006-000A0	073007-000A0
steam up to 200 °C						
DRV 730-D	073002-000B0	073003-000B0	073004-000B0	073005-000B0	073006-000B0	073007-000B0

Article numbers are 11 digits. (See option overview and configuration example)

Options

CC - connection		
00 -	ISO 228	standard
30 -	NPT - ASME B1.20.1	

M - materials of wetted inner parts	
0 -	stainless steel 1.4404

E - elastomers		
A -	PTFE/ EPDM	steam up to 150 °C
B -	PTFE/ EPDM/ FEPM	steam up to 200 °C

F - finishes	
0 -	without additional finishes

Configuration example of an article number with additional options

inlet pressure: 3 bar
seals: PTFE/EPDM/FEPM

outlet pressure: 1.5 bar
temperature: 160 °C

connection: 2" NPT
without additional finishes

art. no. standard version											
							C	C	M	E	F
0	7	3	0	0	7	-	3	0	0	B	0

Manometer

diameter	connection	body	pressure range	max. temp.	art.no.*
63 mm	G 1/4", central back	stainless steel	0 - 10 bar	200 °C	009014

*article numbers are 11 digits, see option overview and configuration example

Sizing Step 1: Valve capacity

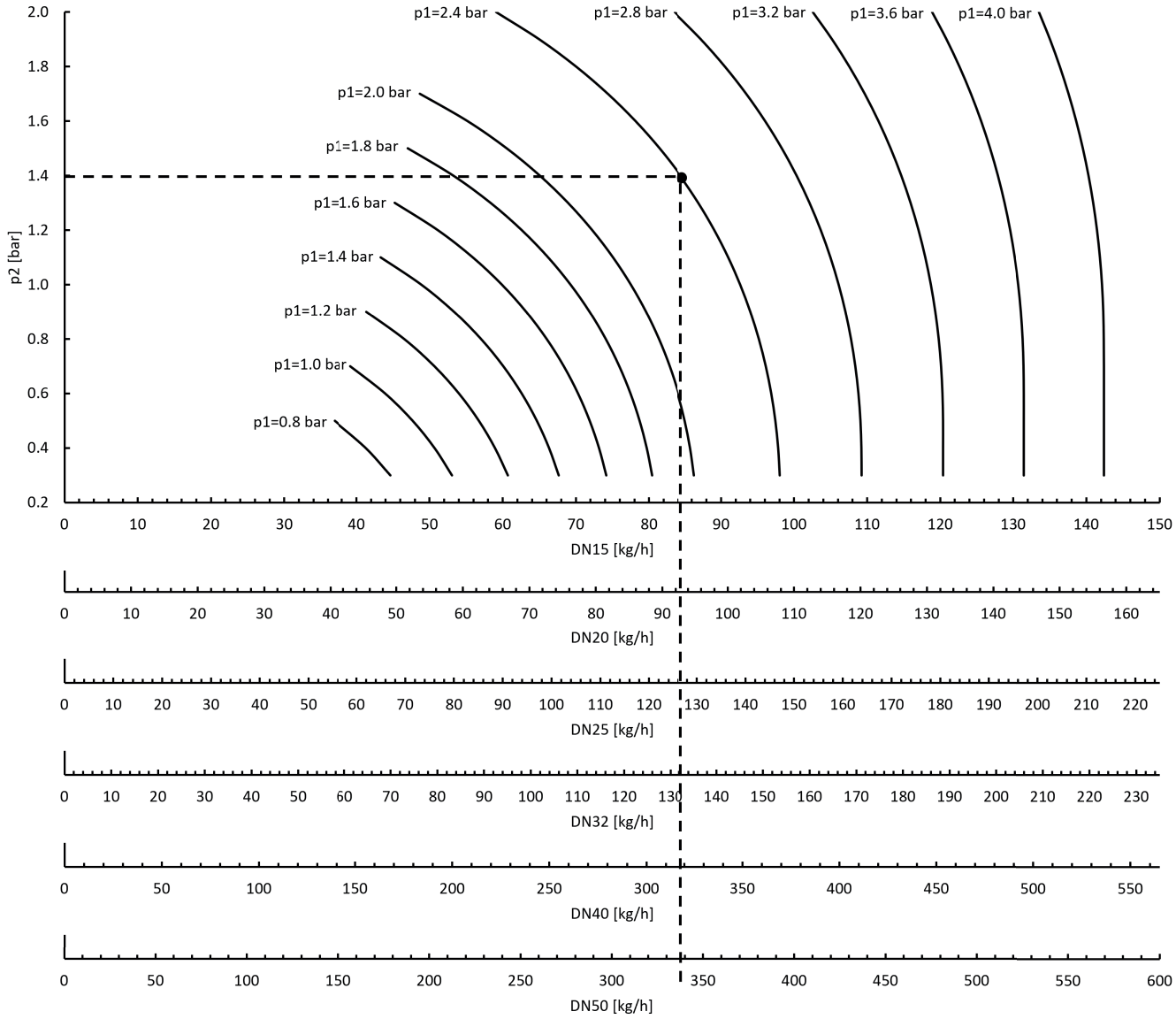

Example: Selection of a valve for an inlet pressure (p1) of 2.4 and an outlet pressure (p2) of 1.4 bar based on the valve capacity. The application requires a saturated steam mass flow of 300 kg/h. Dimensioning according to the maximum flow rate: Entering the criteria shows that a DN40 valve would be sufficient (the required capacity to the left of the dashed line).

Sizing Step 2: Max. Flow rate

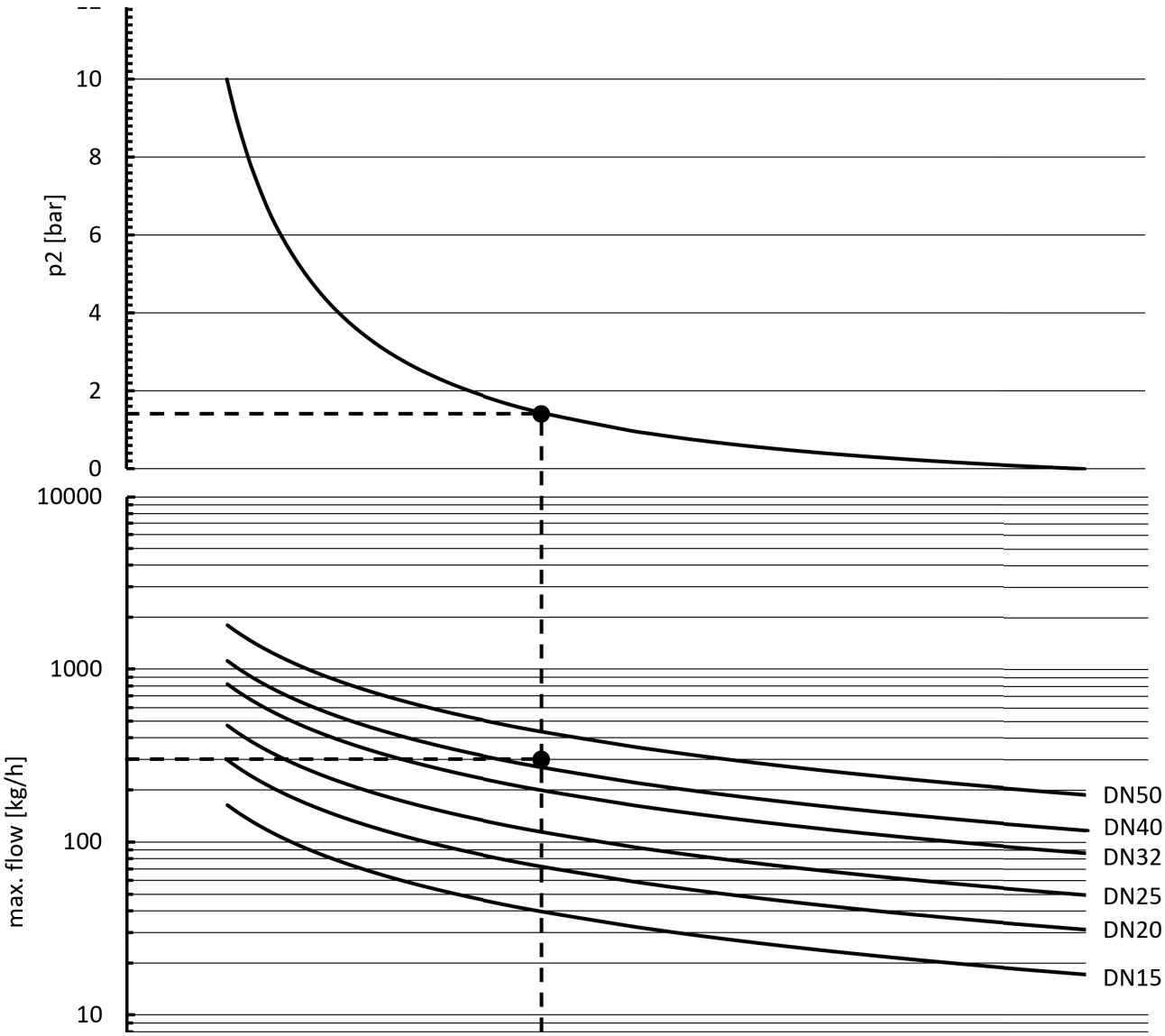

Example: Selection of a valve for an inlet pressure (p1) of 2.4 and an outlet pressure (p2) of 1.4 bar based on the maximum recommended media velocity of 40 m/s. The application requires a saturated steam mass flow of 300 kg/h. Dimensioning according to the maximum media velocity: Entering the criteria shows that a DN50 valve would be sufficient (curve above the required capacity).